INSTRUCTIONS:
1. In BMP Column, click on Blue Cell to Activate Drop Down Menu
2. Select BMP from Drop Down Menu
3. After BMP is selected, TSS Removal and other Columns are automatically completed.

Version 1, Automated: Mar. 4, 2008

Location: G1746 Retreat Amherst Typical treatment train

TSS Removal Calculation Worksheet

B BMP[1]	C TSS Removal Rate[1]	D Starting TSS Load*	E Amount Removed (C*D)	F Remaining Load (D-E)
Deep Sump and Hooded Catch **Basin**	0.25	1.00	0.25	0.75
Sediment **Forebay**	0.25	0.75	0.19	0.56
Infiltration Basin	0.80	0.56	0.45	0.11
	0.00	0.11	0.00	0.11
	0.00	0.11	0.00	0.11

Total TSS Removal = 89%

Separate Form Needs to be Completed for Each Outlet or BMP Train

Project: Retreat Amherst
Prepared By: SVE Associates
Date: 5/23/2014

*Equals remaining load from previous BMP (E) which enters the BMP

Non-automated TSS Calculation Sheet must be used if Proprietary BMP Proposed
1. From MassDEP Stormwater Handbook Vol. 1

Mass. Dept. of Environmental Protection

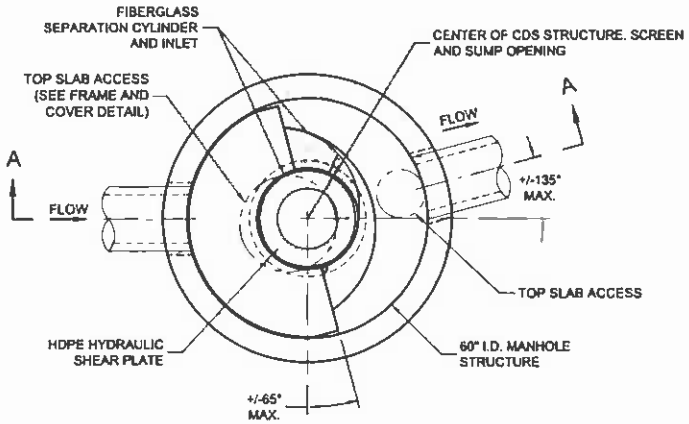

PLAN VIEW
N.T.S.

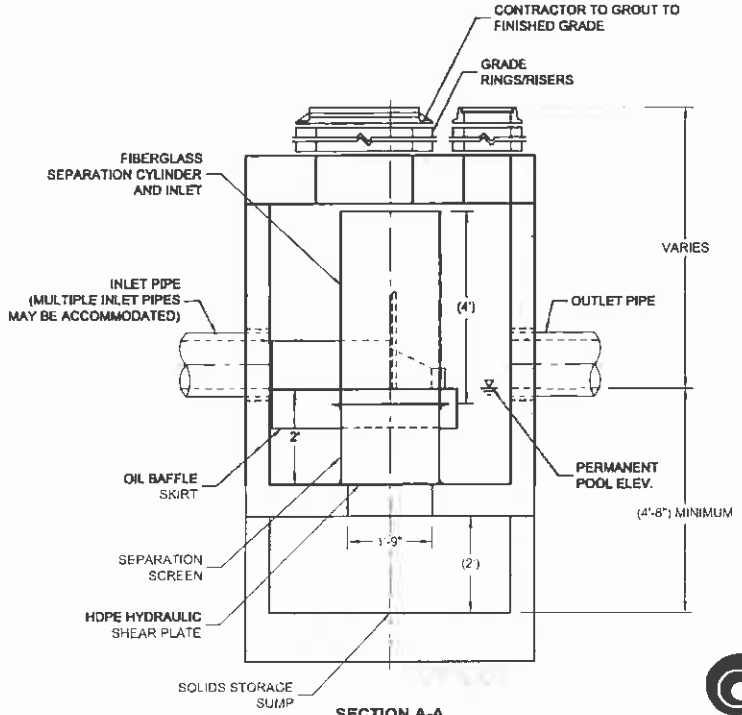

SECTION A-A
N.T.S.

CDS2015 DESIGN NOTES

CDS2015 RATED TREATMENT CAPACITY IS 0.7 CFS, OR PER LOCAL REGULATIONS. MAXIMUM HYDRAULIC INTERNAL BYPASS CAPACITY IS 14.0 CFS. IF THE SITE CONDITIONS EXCEED 14.0 CFS, AN UPSTREAM BYPASS STRUCTURE IS REQUIRED.

THE STANDARD CDS2015 CONFIGURATION IS SHOWN. ALTERNATE CONFIGURATIONS ARE AVAILABLE AND ARE LISTED BELOW. SOME CONFIGURATIONS MAY BE COMBINED TO SUIT SITE REQUIREMENTS.

DESIGNATION (MODEL SUFFIX)	CONFIGURATION DESCRIPTION
G	GRATED INLET ONLY (NO INLET PIPE)
GP	GRATED INLET WITH INLET PIPE OR PIPES
K	CURB INLET ONLY (NO INLET PIPE)
KP	CURB INLET WITH INLET PIPE OR PIPES
B	SEPARATE OIL BAFFLE (SINGLE INLET PIPE REQUIRED FOR THIS CONFIGURATION)
W	SEDIMENT WEIR FOR NJDEP / NJCAT CONFORMING UNITS

FRAME AND COVER
(DIAMETER VARIES)
N.T.S.

SITE SPECIFIC DATA REQUIREMENTS

STRUCTURE ID			
WATER QUALITY FLOW RATE (CFS)			*
PEAK FLOW RATE (CFS)			*
RETURN PERIOD OF PEAK FLOW (YRS)			*
SCREEN APERTURE (2400 OR 4700)			*
PIPE DATA:	I.E.	MATERIAL	DIAMETER
INLET PIPE 1	*	*	*
INLET PIPE 2	*	*	*
OUTLET PIPE	*	*	*
RIM ELEVATION			*
ANTI-FLOTATION BALLAST		WIDTH	HEIGHT
		*	*

NOTES/SPECIAL REQUIREMENTS:

* PER ENGINEER OF RECORD

GENERAL NOTES

1. CONTECH TO PROVIDE ALL MATERIALS UNLESS NOTED OTHERWISE.
2. DIMENSIONS MARKED WITH ( ) ARE REFERENCE DIMENSIONS. ACTUAL DIMENSIONS MAY VARY.
3. FOR FABRICATION DRAWINGS WITH DETAILED STRUCTURE DIMENSIONS AND WEIGHTS, PLEASE CONTACT YOUR CONTECH STORMWATER SOLUTIONS REPRESENTATIVE. www.contechstormwater.com
4. CDS WATER QUALITY STRUCTURE SHALL BE IN ACCORDANCE WITH ALL DESIGN DATA AND INFORMATION CONTAINED IN THIS DRAWING.
5. STRUCTURE AND CASTINGS SHALL MEET AASHTO HS20 LOAD RATING.
6. HDPE HYDRAULIC SHEAR PLATE IS PLACED ON SHELF AT BOTTOM OF SCREEN CYLINDER. REMOVE AND REPLACE AS NECESSARY DURING MAINTENANCE CLEANING.

INSTALLATION NOTES

1. ANY SUB-BASE, BACKFILL DEPTH, AND/OR ANTI-FLOTATION PROVISIONS ARE SITE-SPECIFIC DESIGN CONSIDERATIONS AND SHALL BE SPECIFIED BY ENGINEER OF RECORD.
2. CONTRACTOR TO PROVIDE EQUIPMENT WITH SUFFICIENT LIFTING AND REACH CAPACITY TO LIFT AND SET THE CDS MANHOLE STRUCTURE (LIFTING CLUTCHES PROVIDED).
3. CONTRACTOR TO ADD JOINT SEALANT BETWEEN ALL STRUCTURE SECTIONS, AND ASSEMBLE STRUCTURE.
4. CONTRACTOR TO PROVIDE, INSTALL, AND GROUT PIPES. MATCH PIPE INVERTS WITH ELEVATIONS SHOWN.
5. CONTRACTOR TO TAKE APPROPRIATE MEASURES TO ASSURE UNIT IS WATER TIGHT. HOLDING WATER TO FLOWLINE INVERT MINIMUM. IT IS SUGGESTED THAT ALL JOINTS BELOW PIPE INVERTS ARE GROUTED.

THIS PRODUCT MAY BE PROTECTED BY ONE OR MORE OF THE FOLLOWING U.S. PATENTS: 5,788,848; 5,641,750; 5,511,886; 5,681,793 RELATED FOREIGN PATENTS OR OTHER PATENTS PENDING.

CONTECH STORMWATER SOLUTIONS

CDS2015
PRECAST CONCRETE WATER QUALITY SYSTEM
STANDARD DETAIL

I:\STORMWATER\DRAFTING\TEMPLATES\CAD STANDARDS\SUBMITTAL WORK IN PROGRESS\CDS\CDS STD DETAIL DRAFT\CDS2015-STD.DWG 8/27/2008 5:19 PM

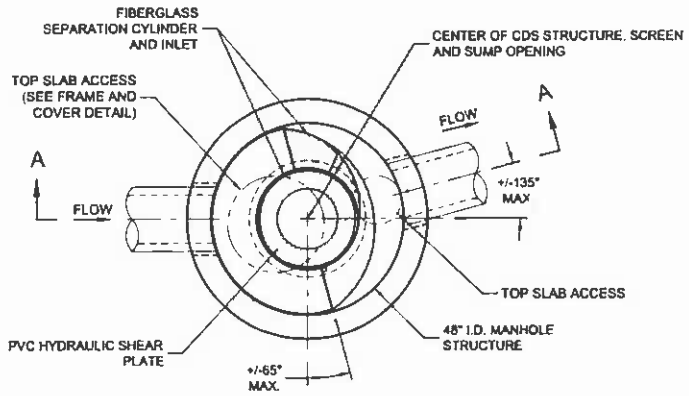

PLAN VIEW
N.T.S.

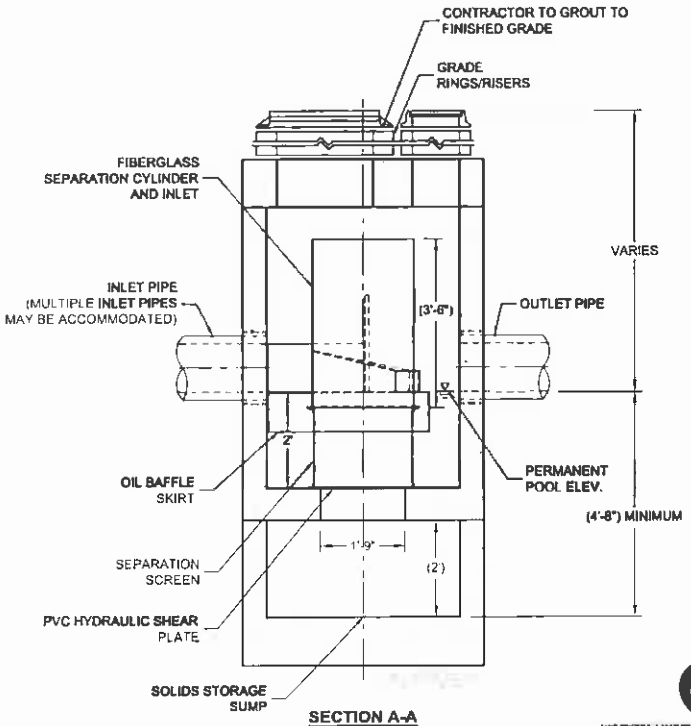

SECTION A-A
N.T.S.

CDS2015-4 DESIGN NOTES

CDS2015-4 RATED TREATMENT CAPACITY IS 0.7 CFS, OR PER LOCAL REGULATIONS. MAXIMUM HYDRAULIC INTERNAL BYPASS CAPACITY IS 10.0 CFS. IF THE SITE CONDITIONS EXCEED 10.0 CFS, AN UPSTREAM BYPASS STRUCTURE IS REQUIRED.

THE STANDARD CDS2015-4 CONFIGURATION IS SHOWN. ALTERNATE CONFIGURATIONS ARE AVAILABLE AND ARE LISTED BELOW. SOME CONFIGURATIONS MAY BE COMBINED TO SUIT SITE REQUIREMENTS

DESIGNATION (MODEL SUFFIX)	CONFIGURATION DESCRIPTION
G	GRATED INLET ONLY (NO INLET PIPE)
GP	GRATED INLET WITH INLET PIPE OR PIPES
K	CURB INLET ONLY (NO INLET PIPE)
KP	CURB INLET WITH INLET PIPE OR PIPES

FRAME AND COVER
(DIAMETER VARIES)
N.T.S.

SITE SPECIFIC DATA REQUIREMENTS

STRUCTURE ID			
WATER QUALITY FLOW RATE (CFS)			*
PEAK FLOW RATE (CFS)			*
RETURN PERIOD OF PEAK FLOW (YRS)			*
SCREEN APERTURE (2400 OR 4700)			*
PIPE DATA:	I.E.	MATERIAL	DIAMETER
INLET PIPE 1	*	*	*
INLET PIPE 2	*	*	*
OUTLET PIPE	*	*	*
RIM ELEVATION			*
ANTI-FLOTATION BALLAST		WIDTH	HEIGHT
		*	*

NOTES/SPECIAL REQUIREMENTS:

* PER ENGINEER OF RECORD

GENERAL NOTES

1. CONTECH TO PROVIDE ALL MATERIALS UNLESS NOTED OTHERWISE.
2. DIMENSIONS MARKED WITH ( ) ARE REFERENCE DIMENSIONS. ACTUAL DIMENSIONS MAY VARY.
3. FOR FABRICATION DRAWINGS WITH DETAILED STRUCTURE DIMENSIONS AND WEIGHTS, PLEASE CONTACT YOUR CONTECH STORMWATER SOLUTIONS REPRESENTATIVE. www.contechstormwater.com
4. CDS WATER QUALITY STRUCTURE SHALL BE IN ACCORDANCE WITH ALL DESIGN DATA AND INFORMATION CONTAINED IN THIS DRAWING.
5. STRUCTURE AND CASTINGS SHALL MEET AASHTO HS20 LOAD RATING.
6. PVC HYDRAULIC SHEAR PLATE IS PLACED ON SHELF AT BOTTOM OF SCREEN CYLINDER. REMOVE AND REPLACE AS NECESSARY DURING MAINTENANCE CLEANING.

INSTALLATION NOTES

1. ANY SUB-BASE, BACKFILL DEPTH, AND/OR ANTI-FLOTATION PROVISIONS ARE SITE-SPECIFIC DESIGN CONSIDERATIONS AND SHALL BE SPECIFIED BY ENGINEER OF RECORD.
2. CONTRACTOR TO PROVIDE EQUIPMENT WITH SUFFICIENT LIFTING AND REACH CAPACITY TO LIFT AND SET THE CDS MANHOLE STRUCTURE (LIFTING CLUTCHES PROVIDED).
3. CONTRACTOR TO ADD JOINT SEALANT BETWEEN ALL STRUCTURE SECTIONS, AND ASSEMBLE STRUCTURE.
4. CONTRACTOR TO PROVIDE, INSTALL, AND GROUT PIPES. MATCH PIPE INVERTS WITH ELEVATIONS SHOWN.
5. CONTRACTOR TO TAKE APPROPRIATE MEASURES TO ASSURE UNIT IS WATER TIGHT. HOLDING WATER TO FLOWLINE INVERT MINIMUM. IT IS SUGGESTED THAT ALL JOINTS BELOW PIPE INVERTS ARE GROUTED.

THIS PRODUCT MAY BE PROTECTED BY ONE OR MORE OF THE FOLLOWING U.S. PATENTS: [illegible] RELATED FOREIGN PATENTS OR OTHER PATENTS PENDING.

CONTECH STORMWATER SOLUTIONS

CDS2015-4
PRECAST CONCRETE WATER QUALITY SYSTEM
STANDARD DETAIL

I:\STORMWATER\DRAFTING\TEMPLATES\CAD STANDARDS\PRODUCT SUBMITTAL DRAWINGS\CURRENT\CDS\CDS STD DETAIL\CDS2015-4-STD.DWG 7/21/2008 11:52 AM

CONTECH®
ENGINEERED SOLUTIONS

Hydrodynamic Separation

Solutions Guide

Hydrodynamic Separation

Selecting the right stormwater solution just got easier...

It's simple to choose the right low impact development (LID) solution to achieve your runoff reduction goals with the Contech UrbanGreen Staircase. First, select the runoff reduction practices that are most appropriate for your site, paying particular attention to pretreatment needs. If the entire design storm cannot be retained, select a treatment best management practice (BMP) for the balance. Finally, select a detention system to address any outstanding downstream erosion.

Removing Pollutants with Hydrodynamic Separation

Hydrodynamic separators are some of the first technologies to be developed for treating stormwater. Our hydrodynamic separation (HDS) products have been providing reliable stormwater treatment solutions for more than 20 years. With performance proven in the lab and in the field at sites across the country, these systems are widely accepted for effective solids removal. They are an optimal choice for pretreatment systems, especially efficient on gross solids, trash and debris, while also removing total suspended solids (TSS).

Fundamentals of HDS

- Create a low velocity vortex action to:
  - Increase efficiency by increasing length of flow path and eliminating short circuiting
  - Concentrate solids in stable, low velocity flow field
- Incorporate flow controls to:
  - Minimize turbulence and velocity
  - Prevent flow surges and resuspension
  - Retain floating pollutants. Provide easy access to captured pollutants to make maintenance easy

Learn more about hydrodynamic separation at www.ContechES/stormwater

DYOHDS™ Tool

Design Your Own Hydrodynamic Separator

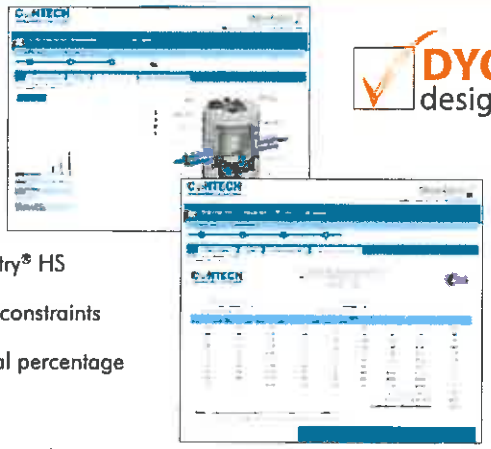

DYO Project
design made easy.

Features

- Choose from three HDS technologies - CDS®, Vortechs® & VortSentry® HS
- Site specific questions ensure the selected unit will comply with site constraints
- Unit size based on selected mean particle size and targeted removal percentage
- Localized rainfall data allows for region specific designs
- PDF report includes detailed performance calculations, specification and standard drawing for the unit that was sized

Design Your Own (DYO) Hydrodynamic Separator online at www.ContechES.com/

Applications

HDS products work well as standalone or end-of-pipe treatment systems and can easily be implemented in a retrofit scenario. They are particularly effective at removal of solids, trash and debris – and can help you meet TMDL requirements for these pollutants. HDS systems are also optimal pretreatment systems – and an important building block in a low impact development (LID) design. By removing solids, trash and debris prior to detention, infiltration or re-use systems, you can significantly increase their service life.

Water Quality

HDS products provide high-performance stormwater pollutant removal. These systems are effective in removing solids to meet water quality goals and can be designed to achieve site treatment goals for TSS or oil.

Pretreatment for Low Impact Development (LID) Designs

Hydrodynamic separation systems installed as pretreatment reduce downstream loading to reduce maintenance

Inlet and Outlet Pollution Control

Our HDS products are especially effective for solids and trash and debris. They can be installed at either the inlet or outlet of a drainage system to prevent pollutants from being discharged into lakes, streams or the ocean.

A vortechs protects detention system from sediment build-up and reduces maintenance

CDS unit installed to remove trash before entering Lake Merritt in Oakland, CA

VortSentry HS is an effective option where space is limited

CDS®

The CDS is a swirl concentrator hybrid technology that provides continuous deflective separation – a combination of swirl concentration and patented indirect screening – into a uniquely capable product. It effectively screens, separates and traps debris, sediment and oil from stormwater runoff and is an ideal system to meet trash Total Maximum Daily Load (TMDL) requirements.

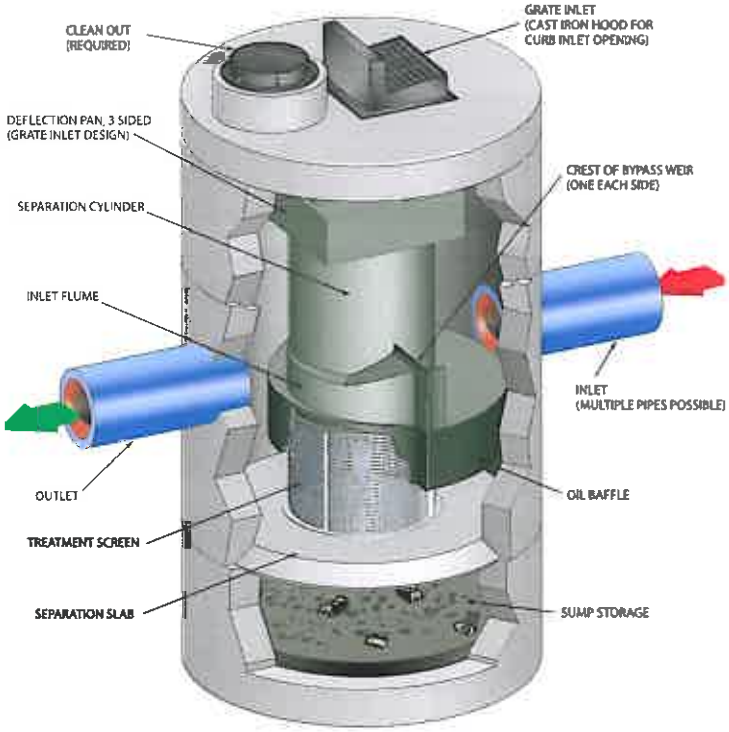

Features & Benefits

One-of-a-Kind Screening Technology

- Captures and retains 100% of floatables and neutrally buoyant debris 2.4mm or larger
- Effectively removes solids down to 100μm
- Self-cleaning screen – the only non-blocking screening technology available
- Water velocities within the swirl chamber continually shear debris off the screen to keep it clean
- Various screening apertures available

Proven Performance

- Performance verified by NJ CAT and WA Ecology

Excellent Pollutant Retention

- Isolated Storage Sump eliminates scour potential
- Oil Baffle improves hydrocarbon removal

Multiple Options to Meet Site-Specific Needs

- Inline, offline, grate inlet and drop inlet configuration
- Accepts multiple pipe inlets and 90-180° angles – eliminate the need for junction manholes
- Internal and external peak bypass options available

CDS removes fine sediments and trash debris

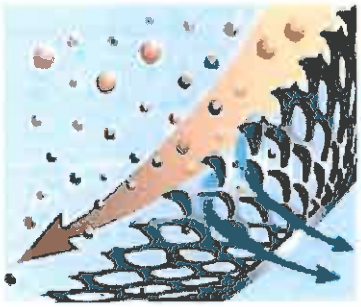

Continuous deflective separation — water velocities within the swirl chamber continually shear debris off the screen to keep it clean

Vortechs®

The Vortechs system's swirl concentrator and flow controls work together to create a low energy environment, ideal for capturing and storing fine particles and other pollutants of concern. With comprehensive lab and field testing, the system delivers proven results and site-specific solutions.

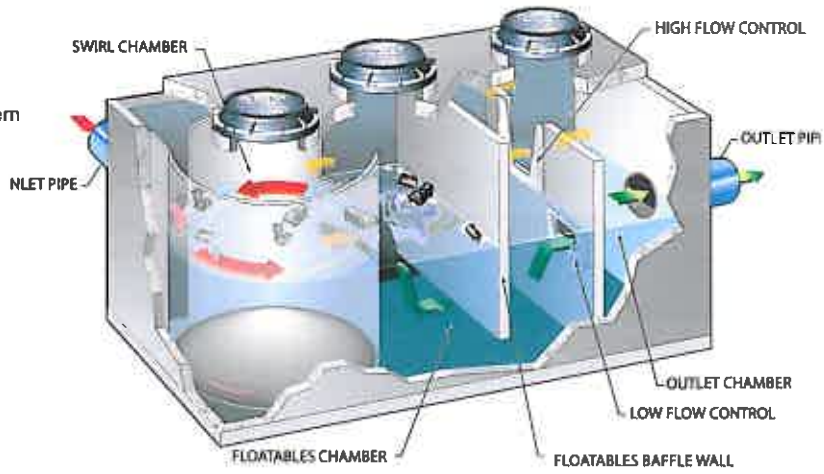

Features & Benefits

Shallow Profile

- Easy and cost-effective installation, especially on sites with high groundwater or bedrock
- Typical invert only 3 feet below pipe

Effective Fine Solids Removal

- Large swirl chamber – Enhances very fine particle removal (down to 50 microns)
- Flow controls reduce inflow velocity and increase residence time
- Largest treatment zone surface area of any swirl concentrator system available

Easy Maintenance

- Unobstructed access to stored pollutants
- Sealed swirl chamber decreases clean-out volume

Proven Performance

- Performance verified by NJ CAT and WA Ecology

Large diameter swirl chamber for enhancement of sediment removal in a low profile unit

Our systems are widely accepted for effective solids removal ❖ ❖ ❖

VortSentry® HS

The VortSentry HS hydrodynamic separator has a small footprint making it an effective pretreatment or treatment option for projects where space is at a premium.

Helical Flow Pattern

- Enhances trapping and containment of pollutants
- Provides effective removal of settleable solids and floating contaminants

Unique Internal Bypass

- Accepts a wide range of pipe sizes to treat and convey a wide range of flows
- Higher flows can be diverted without the use of external bypass structures
- Secondary inlet enhances floatable debris capture

Flexible, Compact Design

- Small manhole footprint
- Inlet and grated inlet configuration available

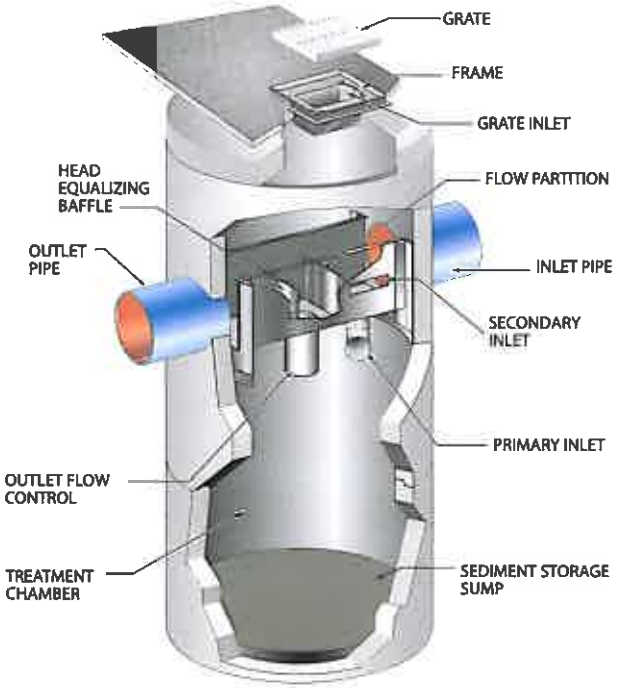

VortSentry®

Similar to the VortSentry HS, the VortSentry is a compact manhole hydrodynamic separator; however it does not have the same treatment flow routing components/controls as the VortSentry HS does. This limits the flow rate and pipe sizes the system can accept. The VortSentry has received approval and is accepted by many municipalities, and is currently available in only those areas. Please see www.ContechES.com/vortsentry for more information.

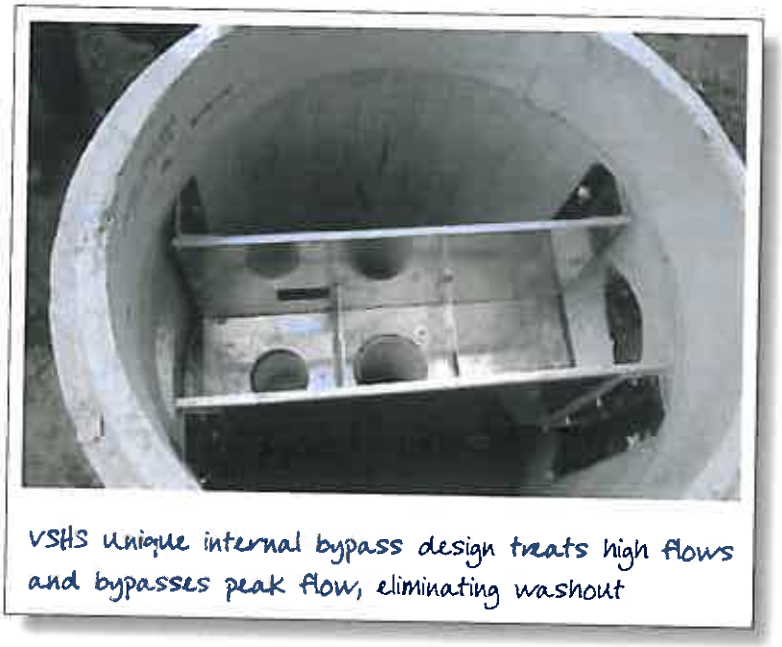

VSHS unique internal bypass design treats high flows and bypasses peak flow, eliminating washout

Maintenance

All stormwater treatment systems – whether natural or manufactured –should be maintained regularly. Despite the widespread implementation of BMPs, water quality goals will not be met if the treatment structures are not properly cleaned and maintained.

Systems vary in their maintenance needs, and the selection of a cost-effective and easy-to-access treatment system can mean a huge difference in maintenance expenses for years to come.

We design our products to minimize maintenance and make it as easy and inexpensive as possible to keep our systems working properly.

A vacuum truck excavates pollutants from the systems

Inspection

Inspection is the key to effective maintenance. Pollutant deposition and transport may vary from year to year and site to site. Semi-annual inspections will help ensure that the system is cleaned out at the appropriate time. Inspections should be performed more frequently where site conditions may cause rapid accumulation of pollutants.

Vortechs, VortSentry and VortSentry HS

These systems should be cleaned out when sediment has accumulated to a specific depth (refer to the respective maintenance guidelines for details). Maintaining these systems is easiest when there is no flow entering the system. A vacuum truck is generally the most effective and convenient method of excavating pollutants from the systems.

A CDS unit can be easily cleaned out in less than 30 minutes

CDS

The recommended cleanout of solids within the CDS unit's sump should occur at 75% of the sump capacity. Access to the CDS unit is typically achieved through two manhole access covers – one allows inspection and cleanout of the separation chamber and sump, and another allows inspection and cleanout of sediment captured and retained behind the screen. A vacuum truck is recommended for cleanout of the CDS unit and can be easily accomplished in less than 30 minutes for most installations.

Find maintenance information for all our products at
www.ContechES.com/maintenance ❖ ❖ ❖

Next Steps

Learn more

See our HDS systems in action. Flash animations available at **www.ContechES.com/videos**

Connect with us

We're always available to make your job easier. Contact your local project consultant for design assistance. Search online at **www.ContechES.com**. While you're there, be sure to check out our upcoming seminar schedule or request an in-house technical presentation.

Start a Project

If you are ready to begin a project, visit us at **www.ContechES.com/designtoolbox**

Contech Engineered Solutions LLC provides site solutions for the civil engineering industry. Contech's portfolio includes bridges, drainage, retaining walls, sanitary sewer, stormwater, erosion control and soil stabilization products.

For more information, visit our web site: www.ContechES.com or call 800.338.1122

The product(s) described may be protected by one or more of the following US patents: 5,322,629; 5,624,576; 5,707,527; 5,759,415; 5,788,848; 5,985,157; 6,027,639; 6,350,374; 6,406,218; 6,641,720; 6,511,595; 6,649,048; 6,991,114; 6,998,038; 7,186,058; 7,296,692; 7,297,266 related foreign patents or other patents pending.

The Stormwater Management StormFilter, MFS and CDS are trademarks, registered trademarks, or licensed trademarks of Contech Engineered Solutions LLC.

CONTECH®
ENGINEERED SOLUTIONS

© 2014 Contech Engineered Solutions LLC
800.338.1122
www.ContechES.com
All Rights Reserved. Printed in the USA.

NOTHING IN THIS CATALOG SHOULD BE CONSTRUED AS AN EXPRESSED WARRANTY OR AN IMPLIED WARRANTY OF MERCHANTABILITY OR FITNESS FOR ANY PARTICULAR PURPOSE. SEE THE CONTECH STANDARD CONDITION OF SALES (VIEWABLE AT WWW.CONTECHES.COM/COS) FOR MORE INFORMATION

Get Social With Us!

UGHDS Brochure 2/14 PDF Revision

We print our brochures entirely on Forest Stewardship Council certified paper. FSC certification ensures that the paper in our brochures contain fiber from well-managed and responsibly harvested forests that meet strict environmental and socioeconomic standards.

FSC

CULTEC, Inc.
878 Federal Road
P.O. Box 280
Brookfield, CT 06804, USA
Phone: 203-775-4416
Toll Free: 1-800-4-CULTEC (1-800-428-5832)
Fax: 203-775-1462
Email: custservice@cultec.com

Model # 900HD, Recharger 900HD

The Recharger 900HD is a 48" (1219 mm) tall, ultra high capacity chamber. Typically when using this model, fewer chambers are required resulting in less labor and a smaller installation area. The Recharger 900HD has the side portal internal manifold feature. HVLV FC-24 Feed Connectors are inserted into the side portals to create the internal manifold. Ultra-High Capacity chamber optimal for replacing large diameter pipe, stacked or crate systems. Maximizes storage to reduce footprint. Allows for additional site development which may be limited by other stormwater management options.

Available models:
Recharger 900RHD Heavy Duty Stand Alone Unit
Recharger 900SHD Heavy Duty Starter Unit
Recharger 900IHD Heavy Duty Intermediate Unit
Recharger 900EHD Heavy Duty End Unit

Check out our StormGenie Automated Drawing Program to design your Contactor 100HD Stormwater System.

Complete your preliminary calculations using our Stormwater Design Calculator.

Click here to request our CULTEC Stormwater Design Guide.

larger image

larger image

Specifications

Length	9.25 ft 2.82 m
Width	78 inches 1981 mm
Height	48 inches

	1219 mm
Installed Length	7 ft 2.13 m
Length Adjustment per Run	2.25 ft 0.69 m
Chamber Storage ?	17.62 ft^3/ft 162.99 $ft^3/unit$ 1219 gal 1.637 m^3/m 3.49 m3/unit 4615 L
Min. Installed Storage - Intermediate ?	27.25 ft^3/ft 190.73 $ft^3/unit$ 1426.84 gal 2.53 m^3/m 5.40 m3/unit 5400.6 L
Min. Area Required per Unit ?	50.75 ft^2 4.71 m^2
Min. Center to Center Spacing (Design Unit Width)	7.25 ft 2.21 m
Max. Allowable Cover	1.83 m 6 ft
Max. Inlet Opening in Endwall	24 in 600 mm
Side Portal Dimensions (H x W)	10.5 x 12 in 267 x 305 mm
Max. Allowable Pipe Size in Side Portal	10 in 250 mm
Compatible Feed Connector	HVLV FC-24 Feed Connector

Print Back

Amenity Area.

CULTEC

Founder of Plastic Chamber Technology
Stormwater and Septic Solutions
Since 1986

1-800-4-CULTEC
custservice@cultec.com

Prepared For:	Project Information:	Engineer:	Calculations Performed By:
Name	Name	Name	Name
Company Name	Street Address	Company Name	Company Name
Street Address	City	Street Address	Street Address
City	State / Zip	City	City
State / Zip	Date: (mm/dd)	State / Zip	State / Zip
Phone		Phone	Phone
Fax		Fax	Fax
Email		Email	Email

Input Given Parameters

Unit of Measure	English	
Select Model	Recharger 900HD	
Stone Porosity	40.0%	
Number of Header Systems	1 Header	
Stone Depth **Above** Chamber	6	inches
Stone Depth **Below** Chamber	6	inches
Workable Bed Depth	10.00	feet
Max. Bed Width	20.00	feet
Storage Volume Required	7600.00	cu. feet

Image for visual reference only.May not reflect selected model.

Chamber Specifications

Height	**48.0**	**inches**
Width	78.00	inches
Length	**9.25**	**feet**
Installed Length	7.00	feet
Bare Chamber Volume	**123.34**	**cu. feet**
Installed Chamber Volume	175.50	cu. feet
Bed Depth	**6.75**	**feet**
Bed Width	15.75	feet
Storage Volume Provided	**7920.53**	**cu. feet**

Materials List

Recharger 900HD Stormwater System by CULTEC, Inc.

Approx. Unit Count - not for construction	43	pieces
Actual Number of Chambers Required	42	pieces
Starter Chambers	**2**	**pieces**
Intermediate Chambers	38	pieces
End Chambers	**2**	**pieces**

HVLV FC-24	**1**	**pieces**
CULTEC No. 410™ Filler Fabric	786.42	sq. yards
CULTEC No. 20L Polyethylene Liner	**15.75**	**feet**
Stone	246.32	cu. yards
Volume of Excavation	**595.55**	**cu. yards**

Bed Detail

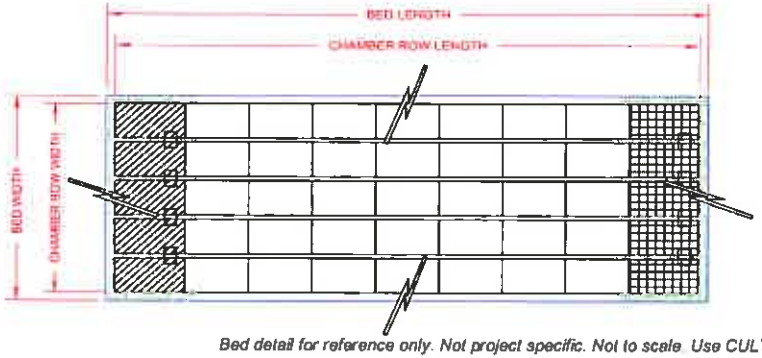

Number of Rows Wide	**2**	**pieces**
Number of Chambers Long	21	pieces
Chamber Row Width	**13.75**	**feet**
Chamber Row Length	149.25	feet
Bed Width	**15.75**	**feet**
Bed Length	151.25	feet
Bed Area Required	**2382.19**	**sq. feet**

Bed detail for reference only. Not project specific. Not to scale. Use CULTEC StormGenie to output project specific detail.

CULTEC, Inc.
P.O. Box 280, Brookfield, CT 06804 USA

Phone: 203-775-4416 - Fax: 203-775-1462 - www.cultec.com

Copyright 1996-2014 CULTEC, Inc. - All rights reserved
CULTEC SDC v. 2012-02 022714

Project Name: Name **Date:** (mm/dd)

Cross Section Detail

Conceptual graphic only. Not job specific.

Recharger 900HD		
Pavement	3	inches
95% Compacted Fill	18	inches
Stone Above	6	inches
Chamber Height	48.0	inches
Stone Below	6	inches
Effective Depth	60.0	inches
Bed Depth	81.0	inches

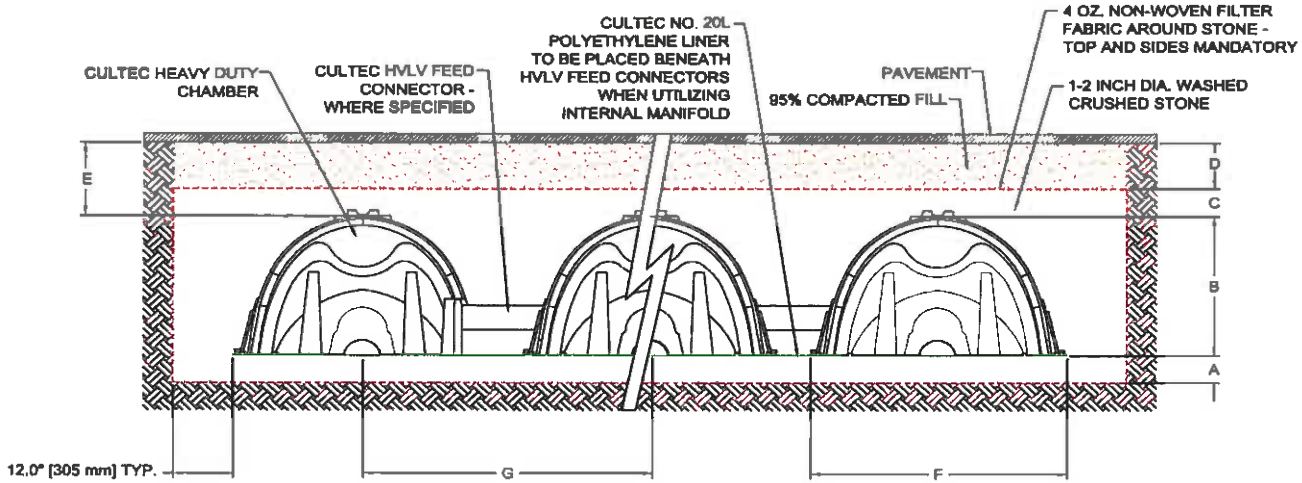

A	Depth of Stone Base	6.0	inches
B	Chamber Height	48.0	inches
C	Depth of Stone Above Units	6.0	inches
D	Depth of 95% Compacted Fill	18.0	inches
E	Max. Depth of Cover Allowed Above Crown of Chamber	6.0	feet
F	Chamber Width	78.0	inches
G	Center to Center Spacing	7.25	feet

Breakdown of Storage Provided by Recharger 900HD Stormwater System		
Chambers	5259.57	cu. feet
Feed Connectors	0.68	cu. feet
Stone	2660.27	cu. feet
Total Storage Provided	7920.53	cu. feet

CULTEC, Inc.
P.O. Box 280, Brookfield, CT 06804 USA
Phone: 203-775-4416 - Fax: 203-775-1462 - www.cultec.com

Copyright 1996-2014 CULTEC, Inc. - All rights reserved

Amenity Parking Area

CULTEC

Founder of Plastic Chamber Technology
Stormwater and Septic Solutions
Since 1986

1-800-4-CULTEC
custservice@cultec.com

Prepared For:			Project Information:			Engineer:			Calculations Performed By:		
Name			Name			Name			Name		
Company Name			Street Address			Company Name			Company Name		
Street Address			City			Street Address			Street Address		
City			State		Zip	City			City		
State		Zip				State		Zip	State		Zip
Phone			Date:	(mm/dd)		Phone			Phone		
Fax						Fax			Fax		
Email						Email			Email		

Input Given Parameters		
Unit of Measure	English	
Select Model	Recharger 900HD	
Stone Porosity	40.0%	
Number of Header Systems	1 Header	
Stone Depth **Above** Chamber	6	inches
Stone Depth **Below** Chamber	6	inches
Workable Bed Depth	10.00	feet
Max. Bed Width	40.00	feet
Storage Volume Required	6621.00	cu. feet

Chamber Specifications		
Height	**48.0**	**inches**
Width	78.00	inches
Length	**9.25**	**feet**
Installed Length	7.00	feet
Bare Chamber Volume	**123.34**	**cu. feet**
Installed Chamber Volume	175.50	cu. feet

Image for visual reference only.May not reflect selected model

Bed Depth	**6.75**	**feet**
Bed Width	37.50	feet
Storage Volume Provided	**6704.46**	**cu. feet**

Materials List

Recharger 900HD Stormwater System by CULTEC, Inc.

Approx. Unit Count - not for construction	37	pieces
Actual Number of Chambers Required	35	pieces
Starter Chambers	**5**	**pieces**
Intermediate Chambers	25	pieces
End Chambers	**5**	**pieces**

HVLV FC-24	**4**	**pieces**
CULTEC No. 410™ Filter Fabric	599.04	sq. yards
CULTEC No. 20L Polyethylene Liner	**37.50**	**feet**
Stone	202.46	cu. yards
Volume of Excavation	**499.22**	**cu. yards**

Bed Detail

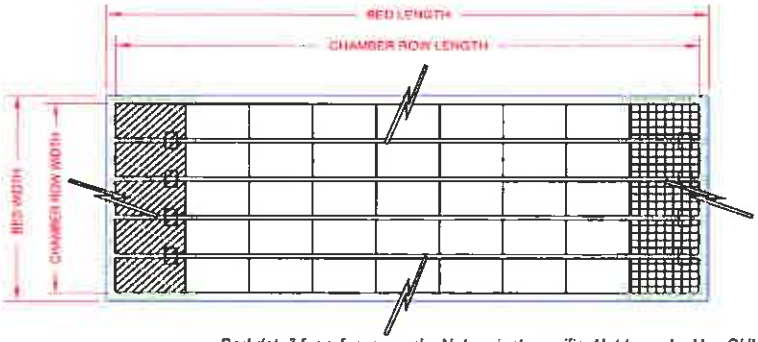

Number of Rows Wide	**5**	**pieces**
Number of Chambers Long	7	pieces
Chamber Row Width	**35.50**	**feet**
Chamber Row Length	51.25	feet
Bed Width	**37.50**	**feet**
Bed Length	53.25	feet
Bed Area Required	**1996.88**	**sq. feet**

Bed detail for reference only. Not project specific. Not to scale Use CULTEC StormGenie to output project specific detail.

CULTEC, Inc.
P.O. Box 280, Brookfield, CT 06804 USA
Phone: 203-775-4416 - Fax: 203-775-1462 - www.cultec.com

Copyright 1996-2014 CULTEC, Inc. - All rights reserved
CULTEC SDC v. 2012-02 022714

Project Name: Name **Date:** (mm/dd)

Cross Section Detail

Conceptual graphic only. Not job specific.

Recharger 900HD		
Pavement	3	inches
95% Compacted Fill	18	inches
Stone Above	6	inches
Chamber Height	48.0	Inches
Stone Below	6	inches
Effective Depth	60.0	inches
Bed Depth	81.0	inches

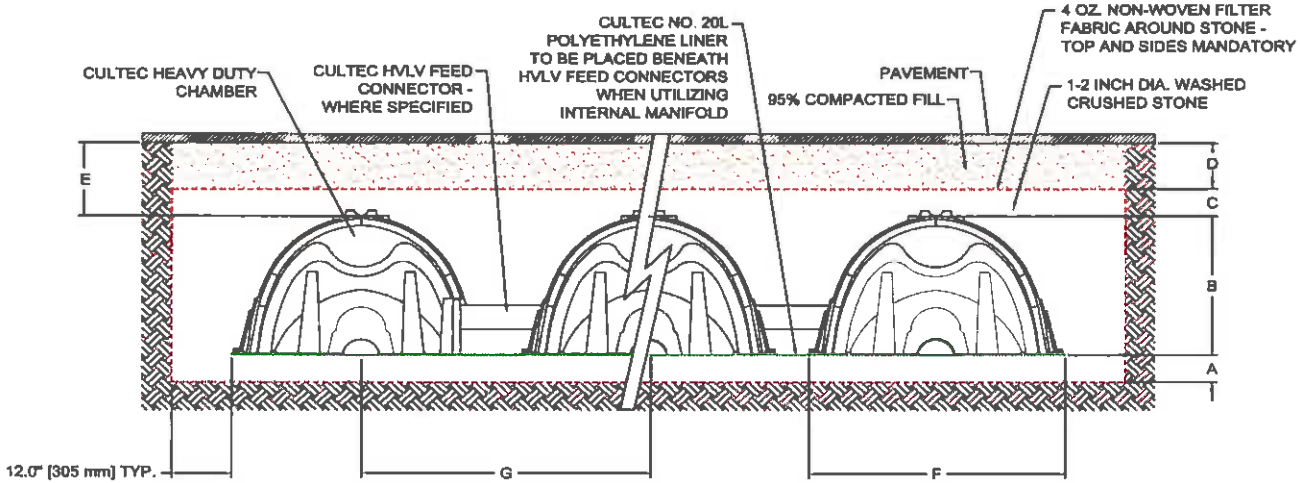

A	Depth of Stone Base	6.0	inches
B	Chamber Height	48.0	inches
C	Depth of Stone Above Units	6.0	inches
D	Depth of 95% Compacted Fill	18.0	inches
E	Max. Depth of Cover Allowed Above Crown of Chamber	6.0	feet
F	Chamber Width	78.0	inches
G	Center to Center Spacing	7.25	feet

Breakdown of Storage Provided by Recharger 900HD Stormwater System		
Chambers	4515.13	cu. feet
Feed Connectors	2.73	cu. feet
Stone	2186.61	cu. feet
Total Storage Provided	6704.46	cu. feet

CULTEC, Inc.
P.O. Box 280, Brookfield, CT 06804 USA
Phone: 203-775-4416 - Fax: 203-775-1462 - www.cultec.com

Copyright 1996-2014 CULTEC, Inc. - All rights reserved
CULTEC SDC v. 2012-02 022714

Pond 20P: Basin 1

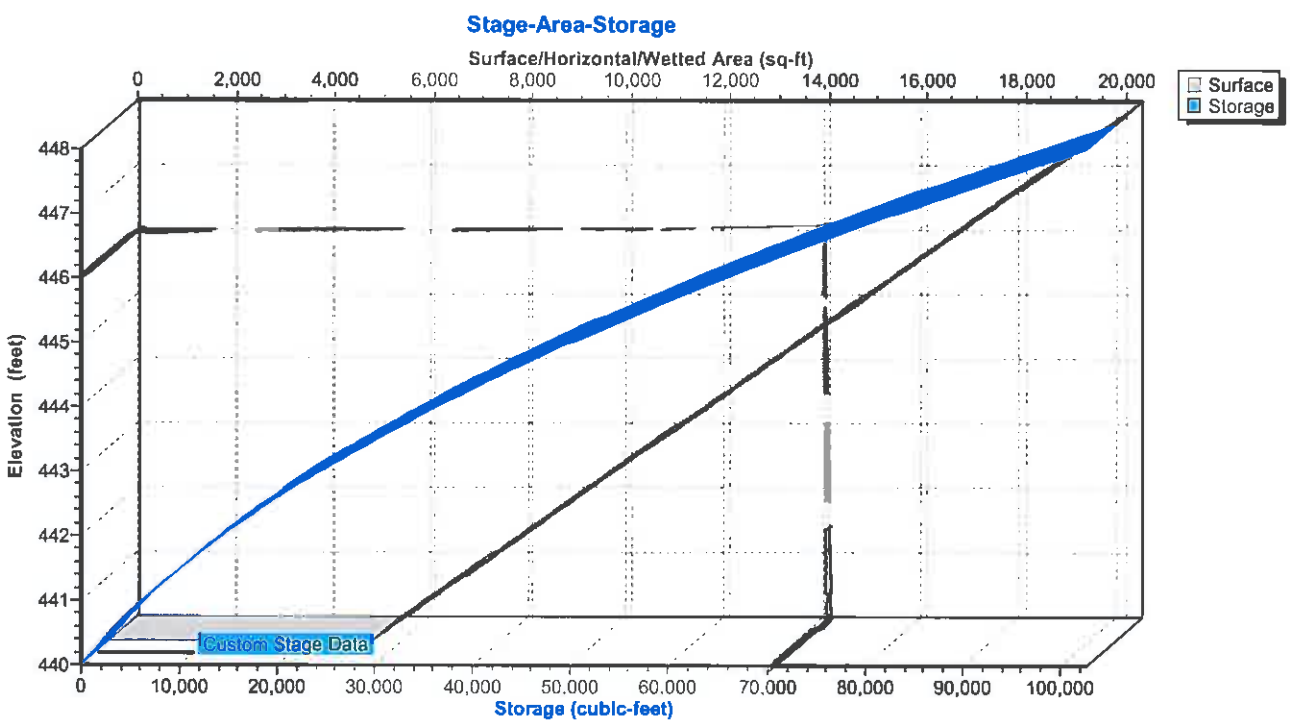

STORAGE @ 446.0 6" ORIFICE
= 70,000 CF

BASIN #1 AREA 2+3 IMPERVIOUS AREA IS 4.45 ACRES. ✓

$4.45\ AC \times 43{,}560\ \frac{SF}{AC} \times \frac{0.6\ in}{12\ in/FT} = 9{,}692\ CF < 70{,}000\ CF$

DRAWDOWN CALCULATION. $9{,}692\ CF \div \frac{2.41\ in}{hr} \times \frac{1\ FT}{12\ in} \times \frac{5330}{SF}$

TIME = 9.04 hrs < 72 hours ✓

Summary for Pond 20P: Basin 1

Inflow Area =	11.530 ac, 38.59% Impervious, Inflow Depth = 2.35" for 100-Year event				
Inflow =	28.41 cfs @	12.12 hrs, Volume=	2.257 af		
Outflow =	0.68 cfs @	19.89 hrs, Volume=	0.735 af, Atten= 98%, Lag= 466.3 min		
Primary =	0.68 cfs @	19.89 hrs, Volume=	0.735 af		

Routing by Stor-Ind method, Time Span= 3.00-60.00 hrs, dt= 0.03 hrs
Peak Elev= 446.77' @ 19.89 hrs Surf.Area= 18,030 sf Storage= 79,073 cf

Plug-Flow detention time= 680.4 min calculated for 0.735 af (33% of inflow)
Center-of-Mass det. time= 544.7 min (1,400.2 - 855.6)

Volume	Invert	Avail.Storage	Storage Description
#1	440.00'	102,700 cf	**Custom Stage Data (Prismatic)** Listed below (Recalc)

Elevation (feet)	Surf.Area (sq-ft)	Inc.Store (cubic-feet)	Cum.Store (cubic-feet)
440.00	5,335	0	0
448.00	20,340	102,700	102,700

Device	Routing	Invert	Outlet Devices
#1	Primary	447.00'	**10.0' long x 10.0' breadth Broad-Crested Rectangular Weir** Head (feet) 0.20 0.40 0.60 0.80 1.00 1.20 1.40 1.60 Coef. (English) 2.49 2.56 2.70 2.69 2.68 2.69 2.67 2.64
#2	Primary	440.00'	**12.0" Round Culvert** L= 75.0' Ke= 0.500 Inlet / Outlet Invert= 440.00' / 435.00' S= 0.0667 '/' Cc= 0.900 n= 0.013, Flow Area= 0.79 sf
#3	Device 2	446.00'	**6.0" Vert. Orifice/Grate** C= 0.600
#4	Device 2	447.00'	**24.0" x 24.0" Horiz. Orifice/Grate** C= 0.600 Limited to weir flow at low heads

Primary **OutFlow** Max=0.68 cfs @ 19.89 hrs HW=446.77' (Free Discharge)
- **1=Broad-Crested Rectangular Weir** (Controls 0.00 cfs)
- 2=Culvert (Passes 0.68 cfs of 9.47 cfs potential flow)
  - 3=Orifice/Grate (Orifice Controls 0.68 cfs @ 3.47 fps)
  - 4=Orifice/Grate (Controls 0.00 cfs)

Pond 23P: Basin 3

STORAGE @ 383.0 WEIR ELEV.
IS 40,000 CF

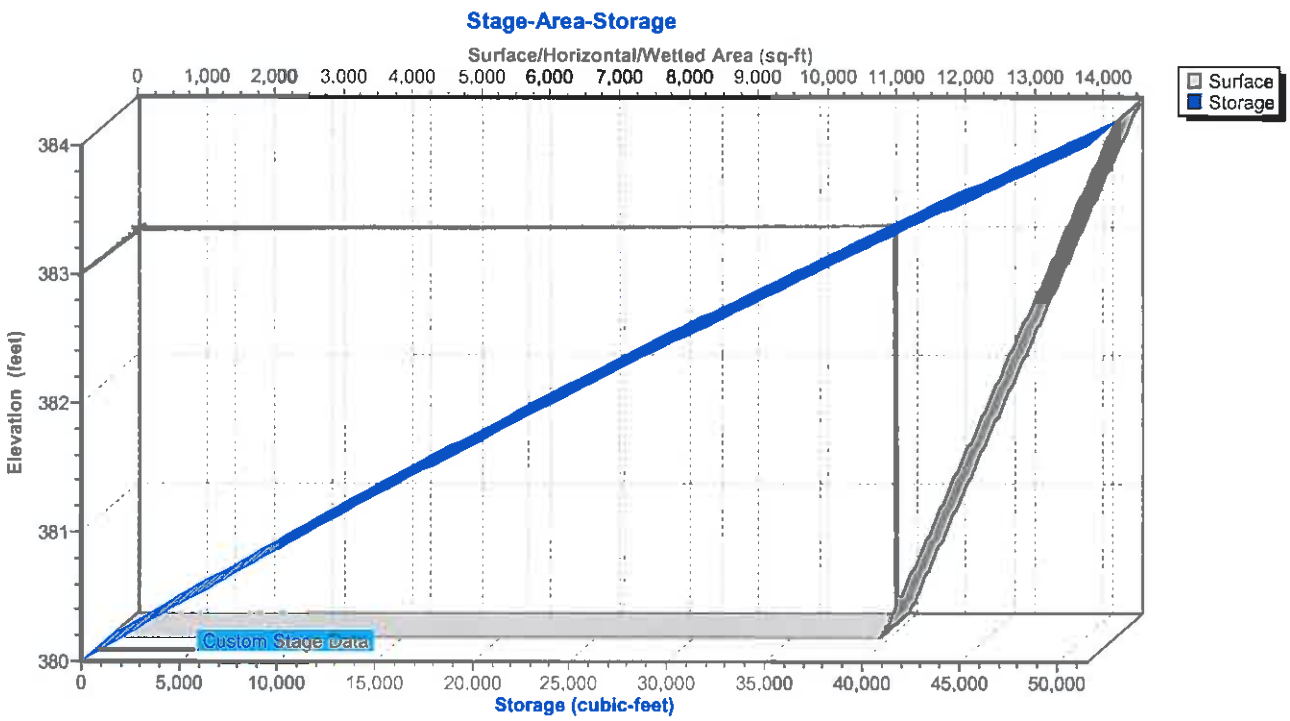

BASIN #3 - INFLOW AREA 1B 1.64 AC IMPERVIOUS.

$1.64\ AC \times 43{,}560\ SF/AC = 71{,}438\ SF$

$71{,}438\ CF \times \frac{0.6\ in}{12\ in/FT} = 3572\ CF$ REQ'D VOL.
$< 40{,}000\ CF$ ✓

DRAWDOWN:

$$TIME = \frac{3572\ CF}{(11{,}200\ SF)\left(2.41\ \frac{in}{HR}\right)\left(\frac{1\ FT}{12\ in}\right)} = 1.6\ hrs < 72\ ✓$$

Summary for Pond 23P: Basin 3

Inflow Area =	6.040 ac, 27.15% Impervious, Inflow Depth = 1.75" for 100-Year event				
Inflow =	11.64 cfs @	12.09 hrs, Volume=	0.882 af		
Outflow =	0.19 cfs @	24.02 hrs, Volume=	0.024 af,	Atten= 98%,	Lag= 716.1 min
Primary =	0.19 cfs @	24.02 hrs, Volume=	0.024 af		

Routing by Stor-Ind method, Time Span= 3.00-60.00 hrs, dt= 0.03 hrs
Peak Elev= 383.03' @ 24.02 hrs Surf.Area= 13,755 sf Storage= 37,789 cf

Plug-Flow detention time= 737.3 min calculated for 0.024 af (3% of inflow)
Center-of-Mass det. time= 567.1 min (1,438.5 - 871.4)

Volume	Invert	Avail.Storage	Storage Description
#1	380.00'	51,550 cf	**Custom Stage Data (Prismatic)** Listed below (Recalc)

Elevation (feet)	Surf.Area (sq-ft)	Inc.Store (cubic-feet)	Cum.Store (cubic-feet)
380.00	11,200	0	0
384.00	14,575	51,550	51,550

Device	Routing	Invert	Outlet Devices
#1	Primary	383.00'	**10.0' long Sharp-Crested Rectangular Weir** 2 End Contraction(s) 1.0' Crest Height

Primary OutFlow Max=0.16 cfs @ 24.02 hrs HW=383.03' (Free Discharge)
└─**1=Sharp-Crested Rectangular Weir** (Weir Controls 0.16 cfs @ 0.55 fps)

Pond 6P: Basin 4

STORAGE @ 430.00
HORIZ. GRATE
50,000 CF

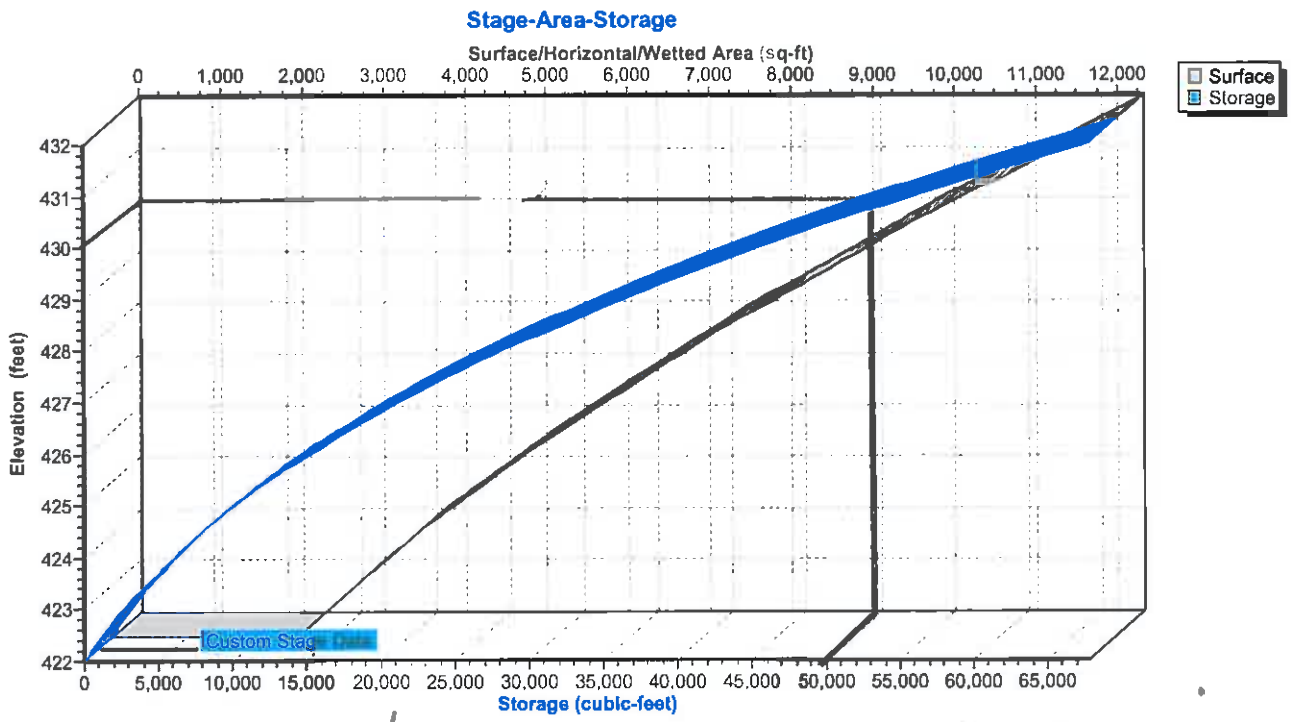

BASIN #4 inflow Area 19 1.21 impervious

$1.21\ AC \times 43{,}560\ SF/AC = 52{,}708\ SF$

$52{,}708\ SF \times \frac{0.6\ in}{12\ in/FT} = 2{,}635\ CF < 50{,}000\ CF$ ✓

Drawdown: $\frac{2{,}635\ CF}{(2265)(2.41)(\frac{1}{2})} = 5.8\ hrs < 72$ ✓

Summary for Pond 6P: Basin 4

Inflow Area = 5.380 ac, 22.49% Impervious, Inflow Depth = 1.50" for 100-Year event
Inflow = 5.86 cfs @ 12.27 hrs, Volume= 0.674 af
Outflow = 0.00 cfs @ 3.00 hrs, Volume= 0.000 af, Atten= 100%, Lag= 0.0 min
Primary = 0.00 cfs @ 3.00 hrs, Volume= 0.000 af

Routing by Stor-Ind method, Time Span= 3.00-40.00 hrs, dt= 0.05 hrs
Peak Elev= 428.14' @ 25.00 hrs Surf.Area= 7,703 sf Storage= 29,379 cf

Plug-Flow detention time= (not calculated: initial storage excedes outflow)
Center-of-Mass det. time= (not calculated: no outflow)

Volume	Invert	Avail.Storage	Storage Description
#1	422.00'	67,816 cf	**Custom Stage Data (Prismatic)** Listed below (Recalc)

Elevation (feet)	Surf.Area (sq-ft)	Inc.Store (cubic-feet)	Cum.Store (cubic-feet)
422.00	2,265	0	0
424.00	3,738	6,003	6,003
426.00	5,515	9,253	15,256
428.00	7,545	13,060	28,316
430.00	9,815	17,360	45,676
432.00	12,325	22,140	67,816

Device	Routing	Invert	Outlet Devices
#1	Primary	431.00'	**10.0' long x 10.0' breadth Broad-Crested Rectangular Weir** Head (feet) 0.20 0.40 0.60 0.80 1.00 1.20 1.40 1.60 Coef. (English) 2.49 2.56 2.70 2.69 2.68 2.69 2.67 2.64
#2	Primary	423.00'	**12.0" Round Culvert** L= 70.0' Ke= 0.500 Inlet / Outlet Invert= 423.00' / 422.00' S= 0.0143 '/' Cc= 0.900 n= 0.013, Flow Area= 0.79 sf
#3	Device 2	430.00'	**24.0" x 24.0" Horiz. Orifice/Grate** C= 0.600 Limited to weir flow at low heads

Primary OutFlow Max=0.00 cfs @ 3.00 hrs HW=422.00' (Free Discharge)
└─**1=Broad-Crested Rectangular Weir** (Controls 0.00 cfs)
└─**2=Culvert** (Controls 0.00 cfs)
└─**3=Orifice/Grate** (Controls 0.00 cfs)

Pond 4P: Basin 5

STORAGE @ 404' - Horiz Grade
+/- 36,000 CF

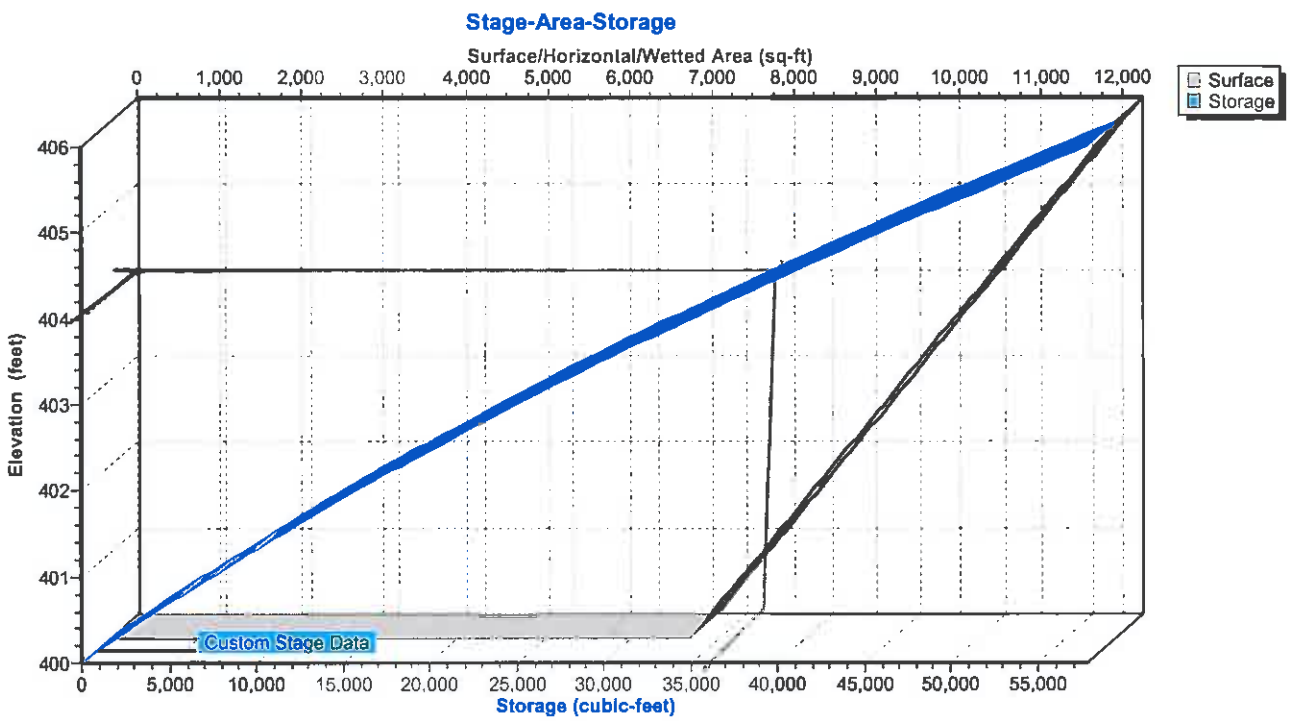

BASIN #5 inflow Area #22 1.75 AC Impervious

1.75 AC x 43,560 SF/AC = 76,230 SF

$76{,}230^{SF} \times \frac{0.6\,in}{12\,in/FT} = 3812\ CF$ Req'd Vol. ✓
< 36,000 CF

Drawdown: $\frac{3812\ CF}{(7055\ SF)(2.41\,in/hr)(1\,ft/12\,inch)} = 2.7\ hrs$ < 72 ✓

Summary for Pond 4P: Basin 5

Inflow Area =	5.540 ac, 31.59% Impervious, Inflow Depth = 2.65" for 100-Year event				
Inflow =	13.61 cfs @	12.18 hrs, Volume=	1.222 af		
Outflow =	1.03 cfs @	14.83 hrs, Volume=	0.415 af, Atten= 92%, Lag= 159.5 min		
Primary =	1.03 cfs @	14.83 hrs, Volume=	0.415 af		

Routing by Stor-Ind method, Time Span= 3.00-40.00 hrs, dt= 0.05 hrs
Peak Elev= 404.11' @ 14.83 hrs Surf.Area= 10,613 sf Storage= 36,339 cf

Plug-Flow detention time= 364.5 min calculated for 0.414 af (34% of inflow)
Center-of-Mass det. time= 232.4 min (1,084.7 - 852.3)

Volume	Invert	Avail.Storage	Storage Description
#1	400.00'	57,900 cf	**Custom Stage Data (Prismatic)** Listed below (Recalc)

Elevation (feet)	Surf.Area (sq-ft)	Inc.Store (cubic-feet)	Cum.Store (cubic-feet)
400.00	7,055	0	0
406.00	12,245	57,900	57,900

Device	Routing	Invert	Outlet Devices
#1	Primary	405.00'	**10.0' long x 10.0' breadth Broad-Crested Rectangular Weir** Head (feet) 0.20 0.40 0.60 0.80 1.00 1.20 1.40 1.60 Coef. (English) 2.49 2.56 2.70 2.69 2.68 2.69 2.67 2.64
#2	Primary	399.00'	**12.0" Round Culvert** L= 30.0' Ke= 0.500 Inlet / Outlet Invert= 399.00' / 398.00' S= 0.0333 '/' Cc= 0.900 n= 0.013, Flow Area= 0.79 sf
#3	Device 2	404.00'	**24.0" x 24.0" Horiz. Orifice/Grate** C= 0.600 Limited to weir flow at low heads

Primary OutFlow Max=1.00 cfs @ 14.83 hrs HW=404.11' (Free Discharge)
└─**1=Broad-Crested Rectangular Weir** (Controls 0.00 cfs)
└─**2=Culvert** (Passes 1.00 cfs of 8.12 cfs potential flow)
└─**3=Orifice/Grate** (Weir Controls 1.00 cfs @ 1.10 fps)

Pond 22P: Basin 6

STORAGE @ 461' weir
is 52,000 CF +/-

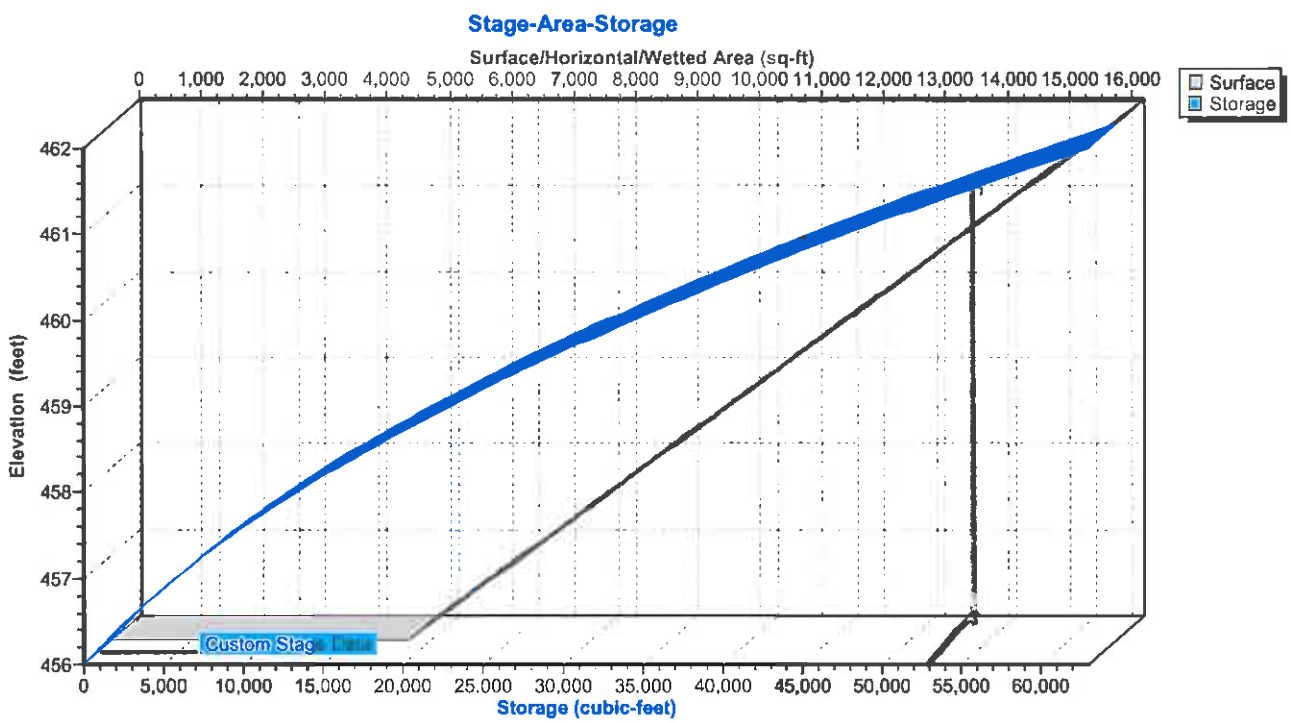

Basin #6 inflow Area 26 0.91 AC impervious

$0.91 \times 43{,}560 = 39{,}640$ SF

$39{,}640 \times \frac{0.4}{12} = 1{,}982$ CF Req'd Vol.
< 52,000 CF ✓

Drawdown: $\frac{1{,}982 \text{ CF}}{(4800 \text{ SF})(2.41)(\frac{1}{12})} = 2.1$ hrs < 72 ✓

Summary for Pond 22P: Basin 6

Inflow Area =	3.020 ac,	30.13% Impervious,	Inflow Depth =	1.84"	for 100-Year event
Inflow =	3.02 cfs @	12.58 hrs,	Volume=	0.463 af	
Outflow =	0.00 cfs @	3.00 hrs,	Volume=	0.000 af,	Atten= 100%, Lag= 0.0 min
Primary =	0.00 cfs @	3.00 hrs,	Volume=	0.000 af	

Routing by Stor-Ind method, Time Span= 3.00-40.00 hrs, dt= 0.05 hrs
Peak Elev= 458.73' @ 26.20 hrs Surf.Area= 9,980 sf Storage= 20,147 cf

Plug-Flow detention time= (not calculated: initial storage excedes outflow)
Center-of-Mass det. time= (not calculated: no outflow)

Volume	Invert	Avail.Storage	Storage Description
#1	456.00'	63,000 cf	**Custom Stage Data (Prismatic)** Listed below (Recalc)

Elevation (feet)	Surf.Area (sq-ft)	Inc.Store (cubic-feet)	Cum.Store (cubic-feet)
456.00	4,800	0	0
462.00	16,200	63,000	63,000

Device	Routing	Invert	Outlet Devices
#1	Primary	461.00'	**10.0' long x 10.0' breadth Broad-Crested Rectangular Weir**
			Head (feet) 0.20 0.40 0.60 0.80 1.00 1.20 1.40 1.60
			Coef. (English) 2.49 2.56 2.70 2.69 2.68 2.69 2.67 2.64

Primary OutFlow Max=0.00 cfs @ 3.00 hrs HW=456.00' (Free Discharge)
└─1=**Broad-Crested Rectangular Weir** (Controls 0.00 cfs)

Pond 24P: Basin 7

STORAGE @ 312.0 Horiz Grate
+/- 44,000 CF

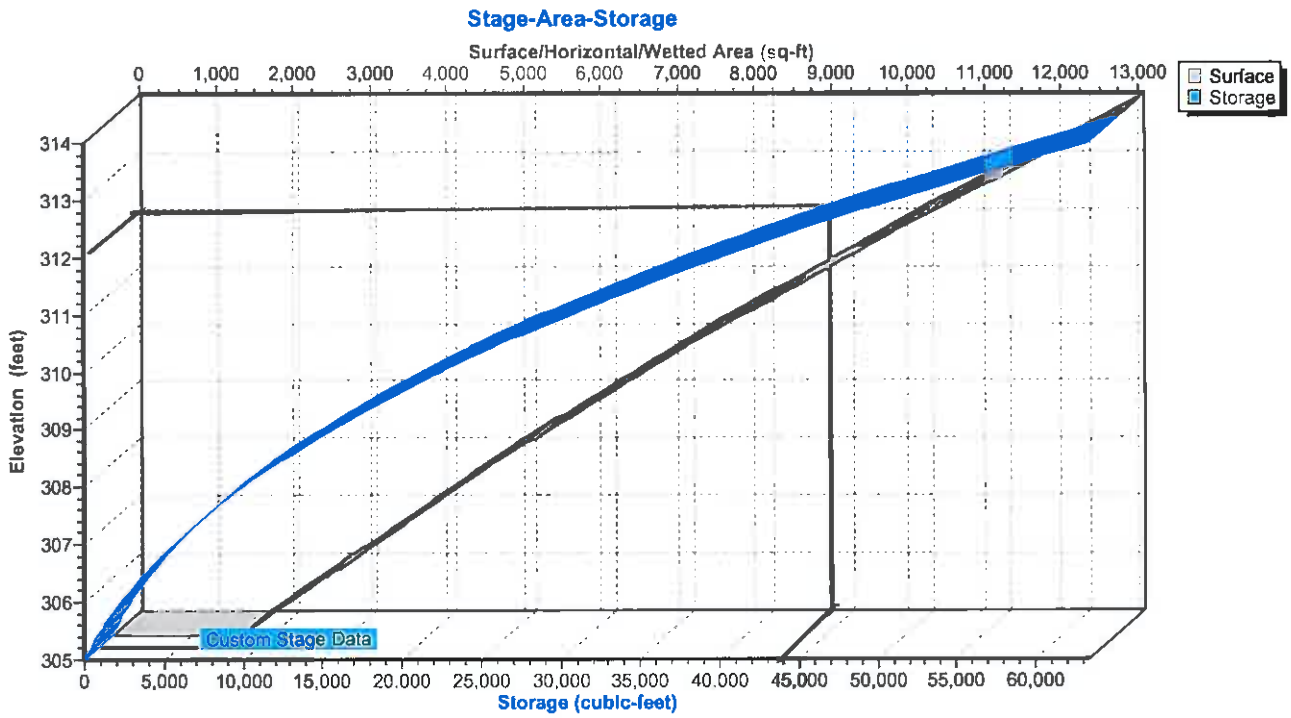

Basin 7 inflow Area 12 1.15 Ac Impervious

1.15 x 43,560 = 50,094 SF

50,094 SF x $\frac{0.6}{12}$ = 2505 CF Req'd Vol.
< 44,000 CF ✓

Drawdown

Time = $\frac{2505 \text{ CF}}{(1690)(2.41)(1/12)}$ = 7.4 hrs < 72 ✓

Summary for Pond 24P: Basin 7

Inflow Area =	4.260 ac,	27.00% Impervious,	Inflow Depth =	1.59"	for 100-Year event
Inflow =	5.12 cfs @	12.25 hrs,	Volume=	0.563 af	
Outflow =	0.00 cfs @	3.00 hrs,	Volume=	0.000 af,	Atten= 100%, Lag= 0.0 min
Primary =	0.00 cfs @	3.00 hrs,	Volume=	0.000 af	

Routing by Stor-Ind method, Time Span= 3.00-40.00 hrs, dt= 0.05 hrs
Peak Elev= 310.26' @ 24.95 hrs Surf.Area= 7,819 sf Storage= 24,526 cf

Plug-Flow detention time= (not calculated: initial storage excedes outflow)
Center-of-Mass det. time= (not calculated: no outflow)

Volume	Invert	Avail.Storage	Storage Description
#1	305.00'	63,392 cf	**Custom Stage Data (Prismatic)** Listed below (Recalc)

Elevation (feet)	Surf.Area (sq-ft)	Inc.Store (cubic-feet)	Cum.Store (cubic-feet)
305.00	1,690	0	0
306.00	2,798	2,244	2,244
308.00	5,005	7,803	10,047
310.00	7,465	12,470	22,517
312.00	10,160	17,625	40,142
314.00	13,090	23,250	63,392

Device	Routing	Invert	Outlet Devices
#1	Primary	313.00'	**10.0' long x 10.0' breadth Broad-Crested Rectangular Weir** Head (feet) 0.20 0.40 0.60 0.80 1.00 1.20 1.40 1.60 Coef. (English) 2.49 2.56 2.70 2.69 2.68 2.69 2.67 2.64
#2	Primary	306.00'	**12.0" Round Culvert** L= 168.0' Ke= 0.500 Inlet / Outlet Invert= 306.00' / 304.30' S= 0.0101 '/' Cc= 0.900 n= 0.013, Flow Area= 0.79 sf
#3	Device 2	312.00'	**24.0" x 24.0" Horiz. Orifice/Grate** C= 0.600 Limited to weir flow at low heads

Primary **OutFlow** Max=0.00 cfs @ 3.00 hrs HW=305.00' (Free Discharge)
└─**1=Broad-Crested Rectangular Weir** (Controls 0.00 cfs)
└─**2=Culvert** (Controls 0.00 cfs)
└─**3=Orifice/Grate** (Controls 0.00 cfs)

Pond 12P: Basin 8

STORAGE @ 363.00 Horiz. GRATE
+/- 38,000 CF

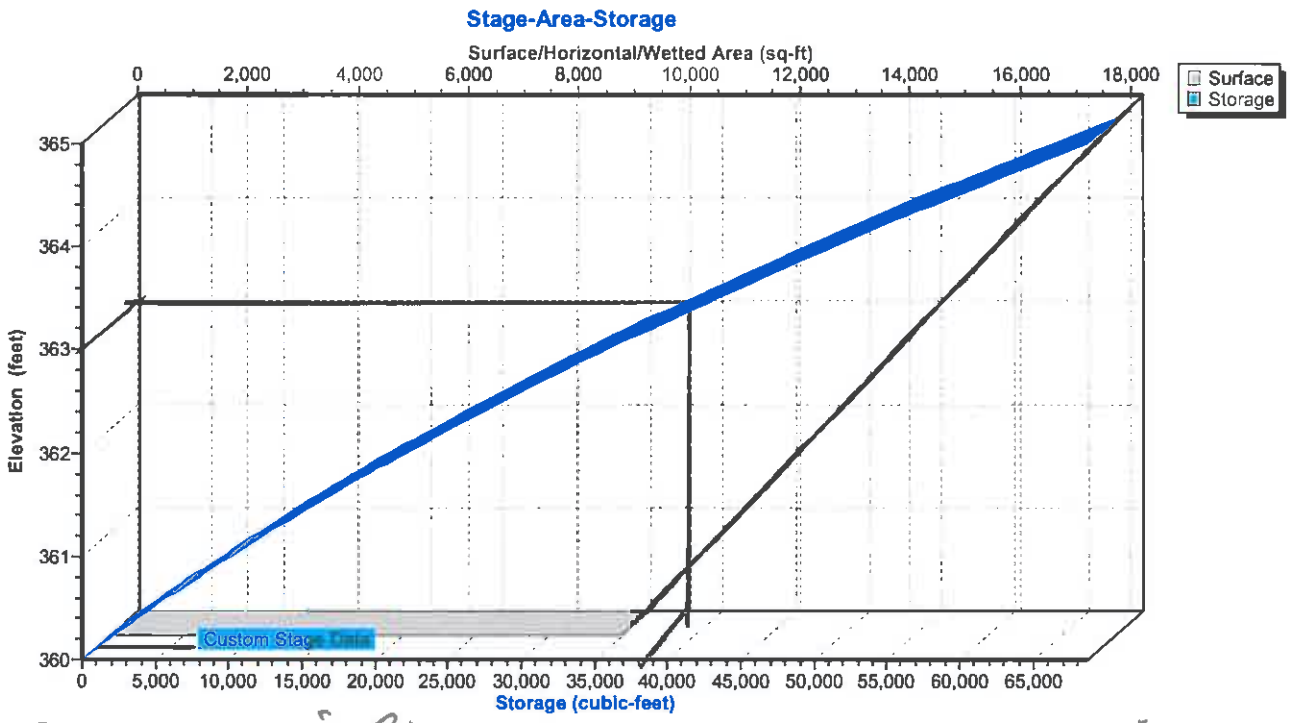

Basin 8 inflow Area 17 1.76 Ac Impervious

1.76 Ac x 43,560 SF/AC = 76,666 SF

76,666 SF x $\frac{0.6 \text{ in}}{12 \text{ in/FT}}$ = 3833 CF Req'd Vol. ✓
< 38,000 CF

Drawdown Time:

Time = $\frac{3833 \text{ CF}}{(9260)(2.4 \text{ ft})(1/12)}$ = 2.1 hrs < 72 ✓

Summary for Pond 12P: Basin 8

Inflow Area = 8.740 ac, 20.14% Impervious, Inflow Depth = 1.27" for 100-Year event
Inflow = 6.17 cfs @ 12.47 hrs, Volume= 0.922 af
Outflow = 0.30 cfs @ 22.38 hrs, Volume= 0.099 af, Atten= 95%, Lag= 594.7 min
Primary = 0.30 cfs @ 22.38 hrs, Volume= 0.099 af

Routing by Stor-Ind method, Time Span= 3.00-40.00 hrs, dt= 0.05 hrs
Peak Elev= 363.05' @ 22.38 hrs Surf.Area= 14,727 sf Storage= 36,588 cf

Plug-Flow detention time= 642.3 min calculated for 0.099 af (11% of inflow)
Center-of-Mass det. time= 466.9 min (1,379.1 - 912.2)

Volume	Invert	Avail.Storage	Storage Description
#1	360.00'	68,700 cf	**Custom Stage Data (Prismatic)** Listed below (Recalc)

Elevation (feet)	Surf.Area (sq-ft)	Inc.Store (cubic-feet)	Cum.Store (cubic-feet)
360.00	9,260	0	0
365.00	18,220	68,700	68,700

Device	Routing	Invert	Outlet Devices
#1	Primary	364.00'	**10.0' long x 10.0' breadth Broad-Crested Rectangular Weir** Head (feet) 0.20 0.40 0.60 0.80 1.00 1.20 1.40 1.60 Coef. (English) 2.49 2.56 2.70 2.69 2.68 2.69 2.67 2.64
#2	Primary	361.00'	**12.0" Round Culvert** L= 40.0' Ke= 0.500 Inlet / Outlet Invert= 361.00' / 360.00' S= 0.0250 '/' Cc= 0.900 n= 0.013, Flow Area= 0.79 sf
#3	Device 2	363.00'	**24.0" x 24.0" Horiz. Orifice/Grate** C= 0.600 Limited to weir flow at low heads

Primary OutFlow Max=0.30 cfs @ 22.38 hrs HW=363.05' (Free Discharge)
└─**1=Broad-Crested Rectangular Weir** (Controls 0.00 cfs)
└─**2=Culvert** (Passes 0.30 cfs of 4.71 cfs potential flow)
└─**3=Orifice/Grate** (Weir Controls 0.30 cfs @ 0.74 fps)

Pond 10P: Basin 9

STORAGE @ 436.0 Horiz. Grate

+/- 60,000 cf

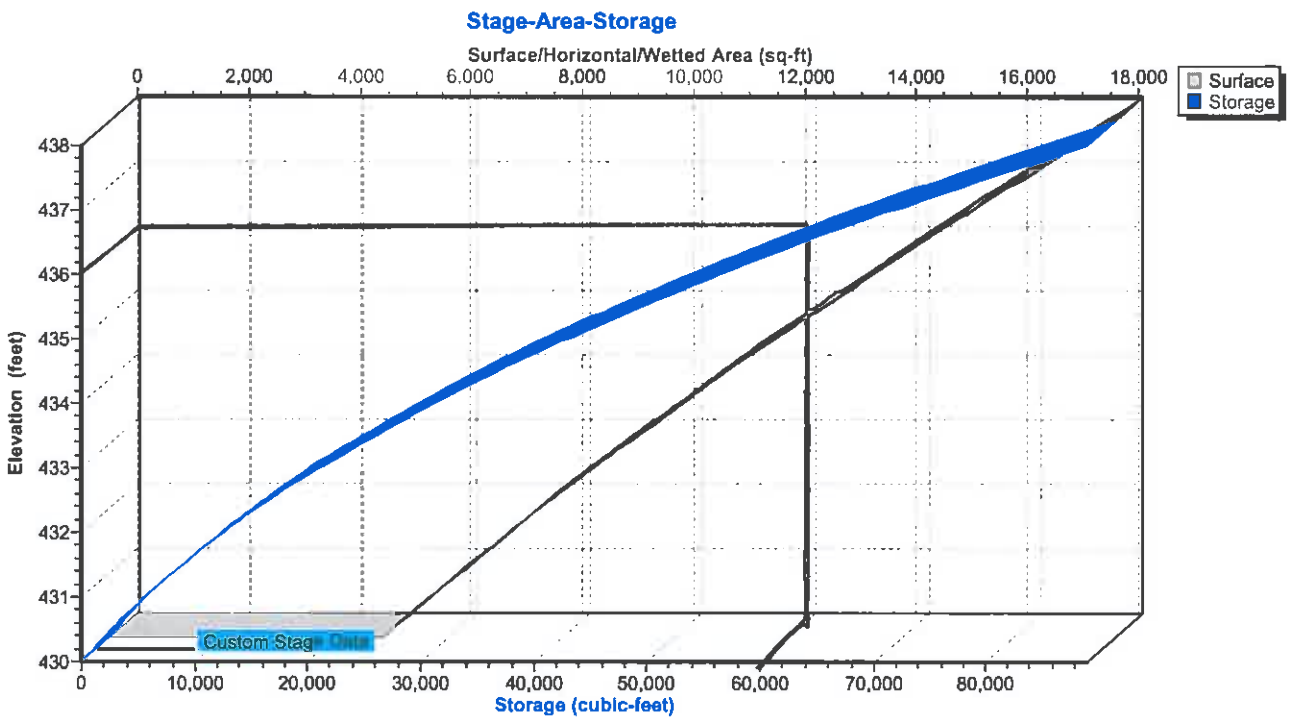

Basin 9 Inflow Area 23 1.67 AC Impervious

1.67 AC x 43,560 SF/AC = 72,745 SF

72,745 SF x $\frac{0.6}{12}$ = 3637 CF Req'd vol. < 60,000 CF ✓

Drawdown $\frac{3637 CF}{(4910)(2.41)(1/12)}$ = 3.7 hrs < 72 hours ✓

Summary for Pond 10P: Basin 9

Inflow Area =	4.850 ac, 34.43% Impervious, Inflow Depth = 2.65" for 100-Year event				
Inflow =	8.61 cfs @	12.41 hrs, Volume=	1.070 af		
Outflow =	0.00 cfs @	3.00 hrs, Volume=	0.000 af, Atten= 100%, Lag= 0.0 min		
Primary =	0.00 cfs @	3.00 hrs, Volume=	0.000 af		

Routing by Stor-Ind method, Time Span= 3.00-40.00 hrs, dt= 0.05 hrs
Peak Elev= 435.28' @ 25.65 hrs Surf.Area= 13,109 sf Storage= 46,588 cf

Plug-Flow detention time= (not calculated: initial storage excedes outflow)
Center-of-Mass det. time= (not calculated: no outflow)

Volume	Invert	Avail.Storage	Storage Description
#1	430.00'	88,950 cf	**Custom Stage Data (Prismatic)** Listed below (Recalc)

Elevation (feet)	Surf.Area (sq-ft)	Inc.Store (cubic-feet)	Cum.Store (cubic-feet)
430.00	4,910	0	0
432.00	7,730	12,640	12,640
434.00	10,890	18,620	31,260
436.00	14,365	25,255	56,515
438.00	18,070	32,435	88,950

Device	Routing	Invert	Outlet Devices
#1	Primary	437.00'	**10.0' long x 10.0' breadth Broad-Crested Rectangular Weir** Head (feet) 0.20 0.40 0.60 0.80 1.00 1.20 1.40 1.60 Coef. (English) 2.49 2.56 2.70 2.69 2.68 2.69 2.67 2.64
#2	Primary	431.00'	**12.0" Round Culvert** L= 55.0' Ke= 0.500 Inlet / Outlet Invert= 431.00' / 430.00' S= 0.0182 '/' Cc= 0.900 n= 0.013, Flow Area= 0.79 sf
#3	Device 2	436.00'	**24.0" x 24.0" Horiz. Orifice/Grate** C= 0.600 Limited to weir flow at low heads

Primary OutFlow Max=0.00 cfs @ 3.00 hrs HW=430.00' (Free Discharge)
└─**1=Broad-Crested Rectangular Weir** (Controls 0.00 cfs)
└─**2=Culvert** (Controls 0.00 cfs)
└─**3=Orifice/Grate** (Controls 0.00 cfs)